ENERGY SOLUTIONS

Waterworld - 4kW Pure Electric system (up to 6m - 3 tons)

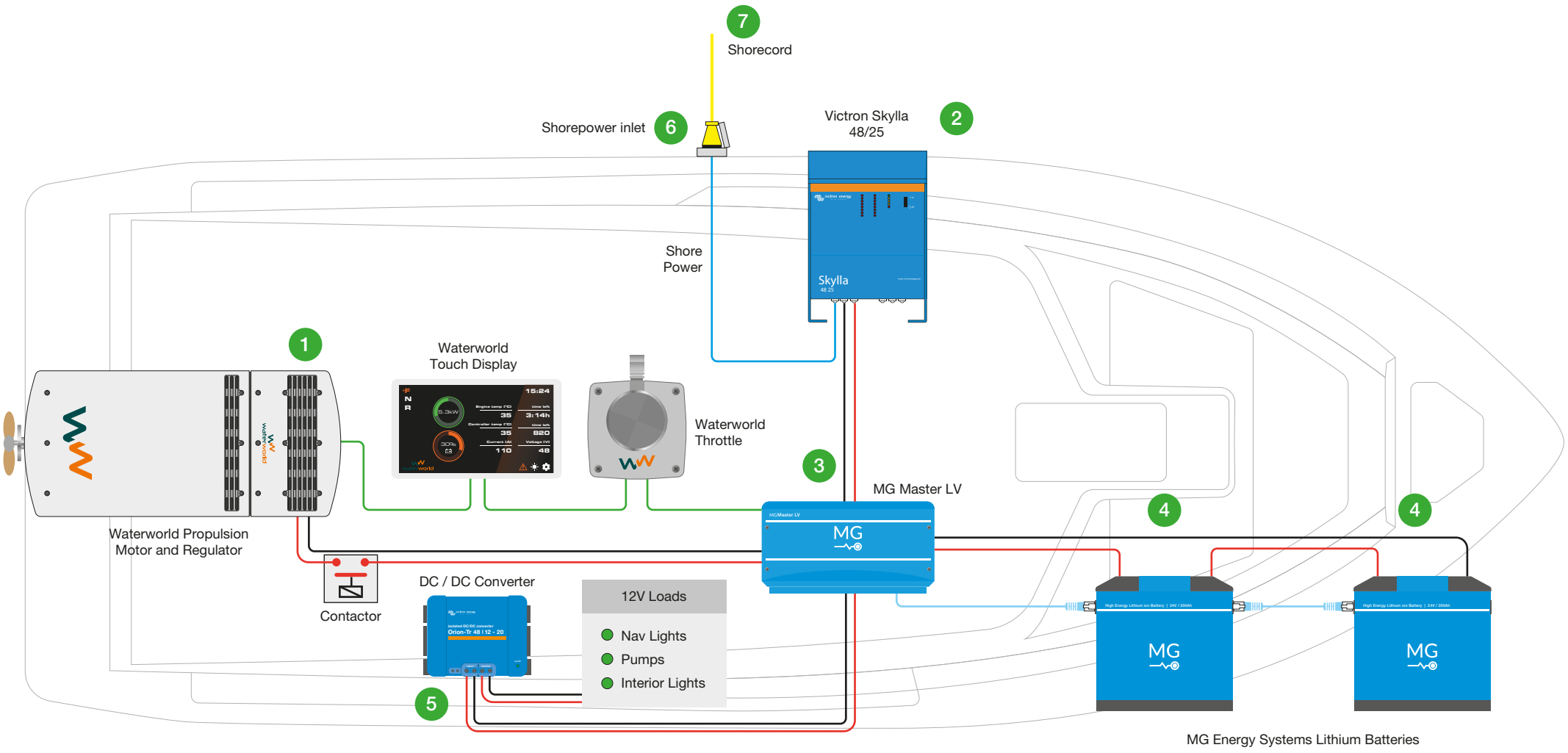

ENERGY SOLUTIONS 52 – 54 Riverside, Medway City Estate, Rochester, Kent ME2 4DP UK
tel: +44 (0)1634 290772 email: sales@energy-solutions.co.uk web: www.energy-solutions.co.uk

System Voltages: 12V and 48V systems
Applications: Marine, Sail Yacht, Inland Waterways, Day Boat

Drawing Number:
20-1000

Quote Q-47493			Waterworld - 4kW Pure Electric system (up to 6m - 3 tons)	
Item on drawing	Line	ES Part Number	Description	Note
1	001	WW-3-04.0I	Waterworld ‘3’ electric propulsion 4kw - complete system	Inc. motor, controller, display, throttle & contactor
2	002	SKYLLA 48/025	Victron Skylla 48 volt 25 amp battery charger	
3	003	BAT-LI-MG-BMS-RJ-24/0150	MG Energy Systems Low Voltage Master BMS	
4	004	BAT-LI-MG-HE-RJ-26V-150	MG Energy Systems Lithium Ion HE Battery 150 Ah @ 26.4 V (3.7 kWh)	
5	005	ORION-IG-48/12-09A-110W	Victron Orion-Tr 48/12-9 (110W)	
6	012	API-RATIO-2PE/16/240/SS	Ratio Stainless steel shorepower inlet. 2P+E. 240v 16 A	
7	013	SHORECORDRATIO-16A/15M	Shorecord Set - 3 core - 16A - 15m	

ENERGY SOLUTIONS

52 – 54 Riverside, Medway City Estate, Rochester, Kent ME2 4DP tel: 01634 290772 email: sales@energy-solutions.co.uk web: energy-solutions.co.uk